RCS

ZCV4

4 ZONE HVAC CONTROL UNIT

Wiring Diagram

Rev E Control Board

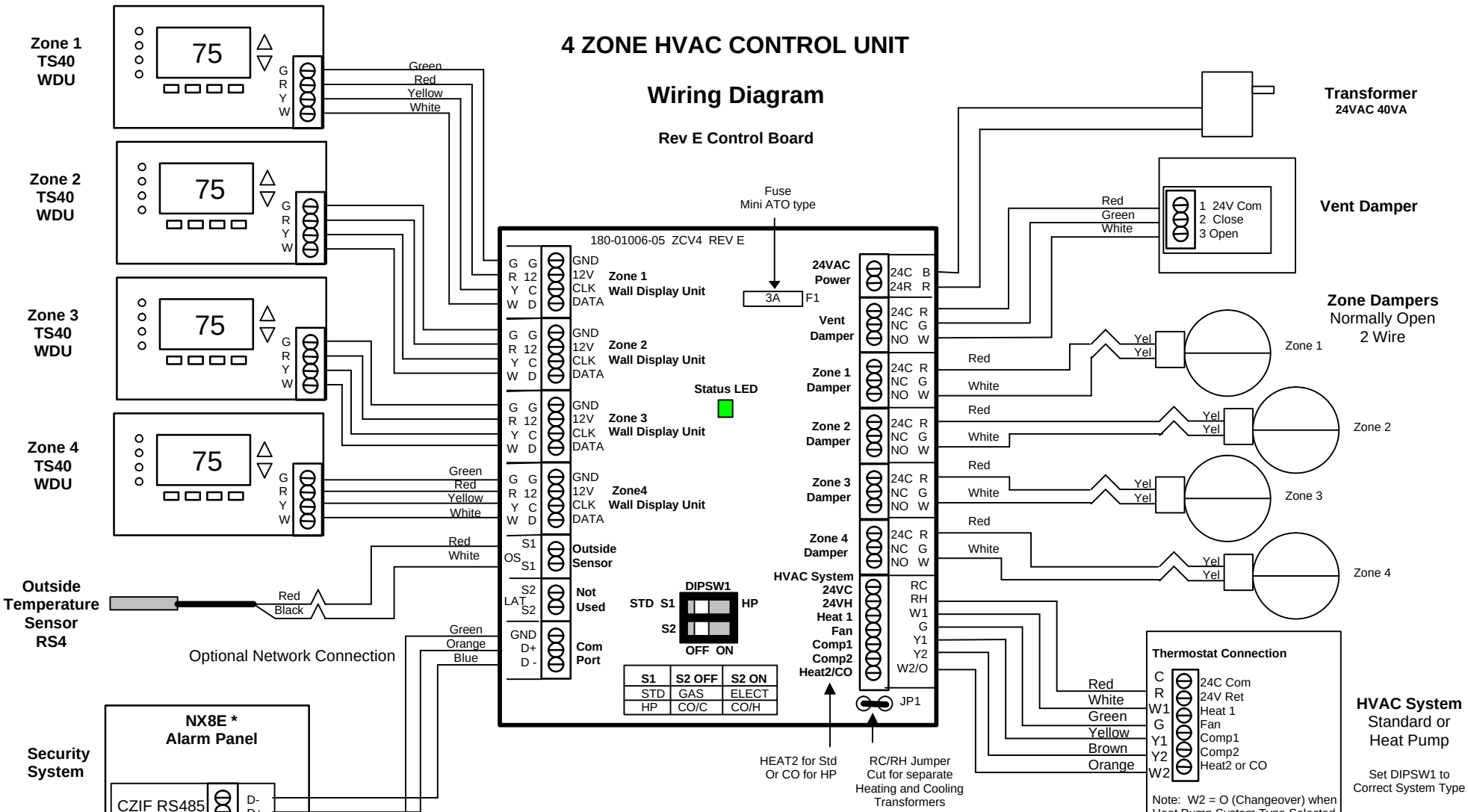

DIPSWITCH DIPSW1 HVAC SYSTEM SETUP

S1 HVAC System Type

Standard System	Set S1 OFF (default)
HP System	Set S1 ON

S2 For Standard System - Fan Type

Gas Sysetm	Set S2 OFF (default)
Electric System	Set S2 ON

S2 For HP System - Changeover (CO) System Type

CO with Cool Set S2	OFF (default)
CO with Heat	Set S2 ON